1

STRATA PLAN OF LOT 50 OF SECTION 7, TOWNSHIP 2, N.W.D. PLAN 69619, EXCEPT PHASE I, PHASE II AND PHASE III, STRATA PLAN N.W. 2690.

MUNICIPALITY OF SURREY

B.C.G.S. 92G.016

FIRST SHEET
SHEET 1 OF 9 SHEETS
PHASE IV
STRATA PLAN N.W. 2690

DEPOSITED AND REGISTERED IN THE LAND TITLE OFFICE AT NEW WESTMINSTER B.C.
THIS 22 DAY OF July, 1989

~~ASSISTANT DEPUTY~~ REGISTRAR

REF #AC180073 to AC180084

THIS PLAN LIES WITHIN THE GREATER VANCOUVER REGIONAL DISTRICT.

SCALE 1:1250 (0 10 20 30 40 50)

DISTANCES ARE IN METRES UNLESS OTHERWISE NOTED.
GRID BEARINGS ARE DERIVED FROM PLAN 69619.

LEGEND:

Pt	DENOTES	PART
m^2	DENOTES	SQUARE METRES
S.L.	DENOTES	STRATA LOT
Pt. A.	DENOTES	PART AREA
T.A.	DENOTES	TOTAL AREA
(c)	DENOTES	COMMON PROPERTY
(P)	DENOTES	PATIO
(G)	DENOTES	GARAGE
L.C.P.	DENOTES	LIMITED COMMON PROPERTY APPURTENANT TO ADJACENT STRATA LOT IF NOT NOTED OTHERWISE

ALL BALCONIES AND PATIOS ARE DEFINED AS TO HEIGHT BY THE CENTRE OF THE FLOOR ABOVE OR ITS EXTENSIONS, OR WHERE THERE IS NO FLOOR ABOVE BY THE AVERAGE HEIGHT OF A STRATA LOT WITHIN THE SAME BUILDING, UNLESS OTHERWISE INDICATED.

DECLARATION OF INTENSION TO CREATE A STRATA PLAN BY PHASE DEVELOPMENT (FORM E) FILED 16th DAY OF DECEMBER 1987 UNDER No. AA 240053

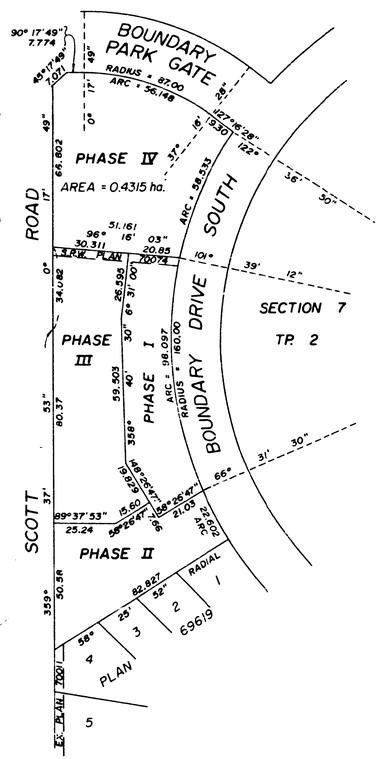

THE ADDRESS FOR SERVICES OF DOCUMENTS ON THE STRATA CORPORATION IS:
THE OWNERS, STRATA PLAN N.W. 2690
12044 BOUNDARY DRIVE SOUTH,
SURREY, B.C.

I, MICHAEL J. McILVANEY, OF VICTORIA, A BRITISH COLUMBIA LAND SURVEYOR, HEREBY CERTIFY THAT THE BUILDINGS ERECTED ON THE PARCEL DESCRIBED ABOVE ARE WHOLLY WITHIN THE EXTERNAL BOUNDARIES OF THE PARCEL. DATED THIS 20th DAY OF June 1989.

M. J. McIlvaney B.C.L.S.

M.J. McILVANEY
B.C. LAND SURVEYOR
VICTORIA, B.C.

FILE 479 PHASE IV

FIRST SHEET
SHEET 2 OF 9 SHEETS
PHASE IV
STRATA PLAN N.W. 2690

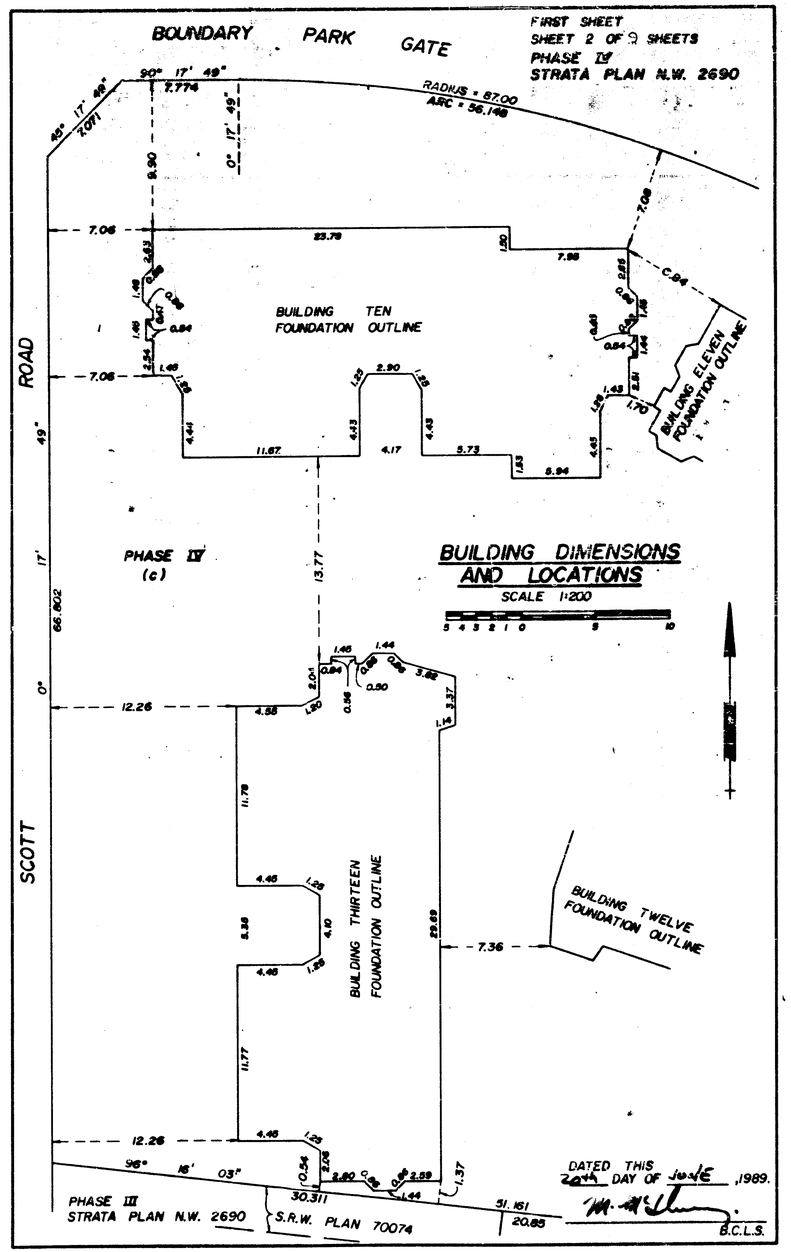

BUILDING DIMENSIONS AND LOCATIONS
SCALE 1:200 (5 4 3 2 1 0 5 10)

DATED THIS 20th DAY OF June, 1989.
M. J. McIlvaney B.C.L.S.

FILE 479 PHASE IV

FIRST SHEET
SHEET 3 OF 9 SHEETS
PHASE IV
STRATA PLAN N.W. 2690

BUILDING DIMENSIONS AND LOCATIONS
SCALE 1:200 (5 4 3 2 1 0 5 10)

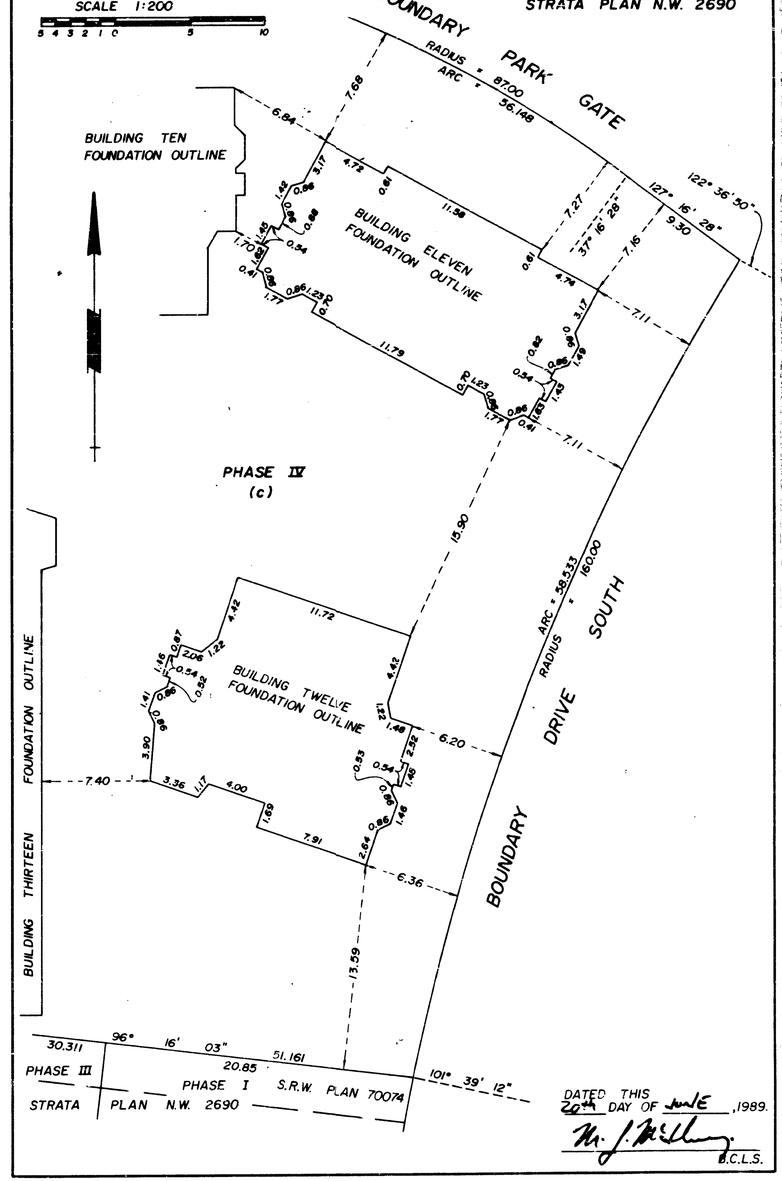

DATED THIS 20th DAY OF June, 1989.
M. J. McIlvaney B.C.L.S.

FILE 479 PHASE IV

2

SECOND SHEET
SHEET 4 OF 9 SHEETS
PHASE IV
STRATA PLAN N.W. 2690

ACCEPTED AS TO FORMS 1 & 2
THIS 14 DAY OF July ,1989

SUPERINTENDENT OF REAL ESTATE

CONDOMINIUM ACT

LOT	SHEET	FORM 1 Schedule of Unit Entitlement: Unit Entitlement	FORM 2 Schedule of Interest Upon Destruction: Interest Upon Destruction	FORM 3 Schedule of Number of Votes: Number of Votes	
25	5,6	168	281		108-12044 Boundary Drive South
26	5,6	168	276		107-12044 Boundary Drive South
27	5,6	168	277		106-12044 Boundary Drive South
28	5,6	168	281		105-12044 Boundary Drive South
29	5,7	164	276		104-12044 Boundary Drive South
30	5,7	164	279		101-12044 Boundary Drive South
31	5,8	172	289		102-12044 Boundary Drive South
32	5,8	165	272		103-12044 Boundary Drive South
33	5,9	162	272		109-12044 Boundary Drive South
34	5,9	157	265		110-12044 Boundary Drive South
35	5,9	157	265		111-12044 Boundary Drive South
36	5,9	158	279		112-12044 Boundary Drive South
Aggregate		1971	3312		

APPROVED AS TO PHASE IV OF A 4 PHASE STRATA PLAN UNDER THE CONDOMINIUM ACT PURSUANT TO SECTION 7(1)F DATED THIS 6th DAY OF July ,1989.

APPROVING OFFICER FOR THE MUNICIPALITY OF SURREY

STATUTORY DECLARATION

I, THE UNDERSIGNED, DO SOLEMNLY DECLARE THAT (1) I, THE UNDERSIGNED, AM THE DULY AUTHORIZED AGENT OF THE OWNER - DEVELOPER.

(2) THE STRATA PLAN IS ENTIRELY FOR RESIDENTIAL USE. I MAKE THIS SOLEMN DECLARATION CONCIENTOUSLY BELIEVING IT TO BE TRUE AND KNOWING THAT IT IS OF THE SAME FORCE AND EFFECT AS IF MADE UNDER OATH.

DECLARED BEFORE ME AT WHITE ROCK, B.C.
THIS 26 DAY OF JUNE ,1989.

J. DAVID BRADFORD
Barrister & Solicitor
3rd Floor-15261 Russell Avenue
White Rock, B.C.

A COMMISSIONER FOR TAKING AFFIDAVITS FOR BRITISH COLUMBIA.

REGISTERED OWNER
DUNDAS DECORATING LTD.
INCORPORATION No. 98795

AUTHORIZED SIGNATORY

AUTHORIZED SIGNATORY

SEAL

SIGNED, SEALED AND DELIVERED IN THE PRESENCE OF:

SIGNATURE
M. W. SMITH
ADDRESS [illegible] ST.
VANCOUVER, B.C.
BANKER
OCCUPATION
(AS TO BOTH SIGNATURES)

MORTGAGEE
IN WITNESS WHERE OF THESE PRESENTS HAVE BEEN EXECUTED THIS 26th DAY OF June ,1989:
P/A DF 118058; C/I DF A211073I
CANADIAN IMPERIAL BANK OF COMMERCE
BY ITS ATTORNEYS

L. Graham
ASSISTANT GENERAL MANAGER

INSPECTOR R.L. Edess

DATED THIS 26th DAY OF JUNE ,1989.
M. McSheaney
B.C.L.S.

FILE 479 PHASE IV

SHEET 5 OF 9 SHEETS
PHASE IV
STRATA PLAN N.W. 2690

SECTIONS

SCALE 1:200

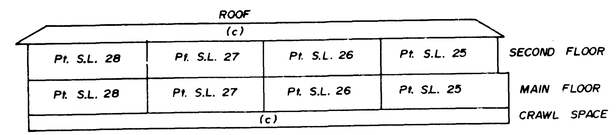

SECTION A-A

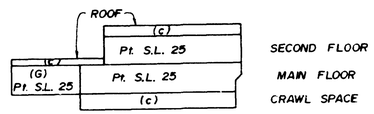

SECTION B-B

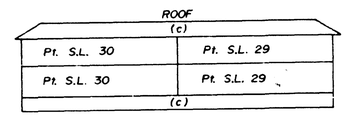

SECTION C-C

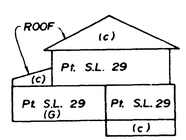

SECTION D-D

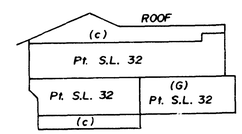

SECTION E-E

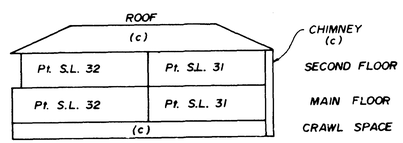

SECTION F-F

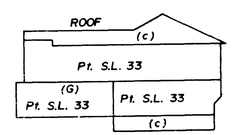

SECTION G-G

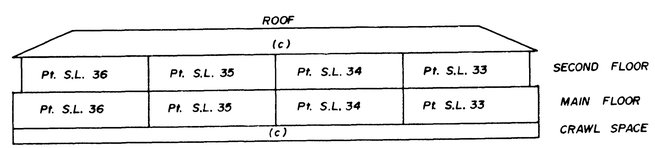

SECTION H-H

DATED THIS 20th DAY OF JUNE ,1989
M. J. McSheaney B.C.L.S.

FILE 479 PHASE IV

SHEET 6 OF 9 SHEETS
PHASE IV
STRATA PLAN N.W. 2690

BUILDING TEN FLOOR PLANS

SCALE 1:200

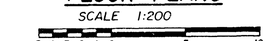

MAIN FLOOR

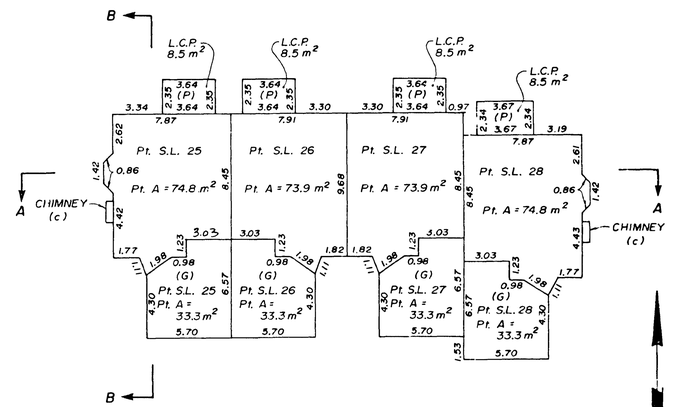

SECOND FLOOR

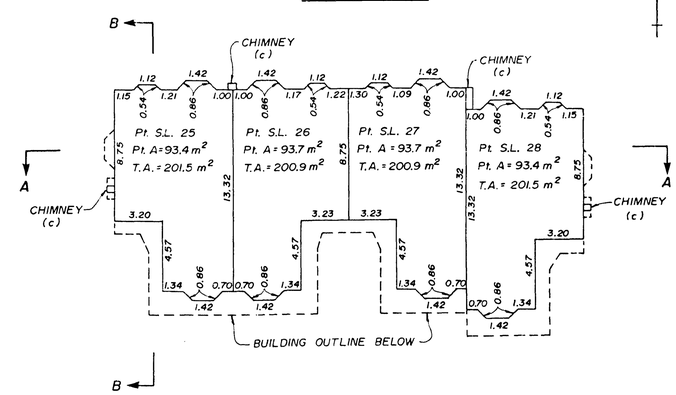

DATED THIS 20TH DAY OF JUNE ,1989.
M. J. McSheaney
B.C.L.S.

FILE 479 PHASE IV

3

BUILDING ELEVEN FLOOR PLANS

SCALE 1:200

5 4 3 2 1 0 5 10

SHEET 7 OF 9 SHEETS
PHASE IV
STRATA PLAN N.W. 2690

MAIN FLOOR

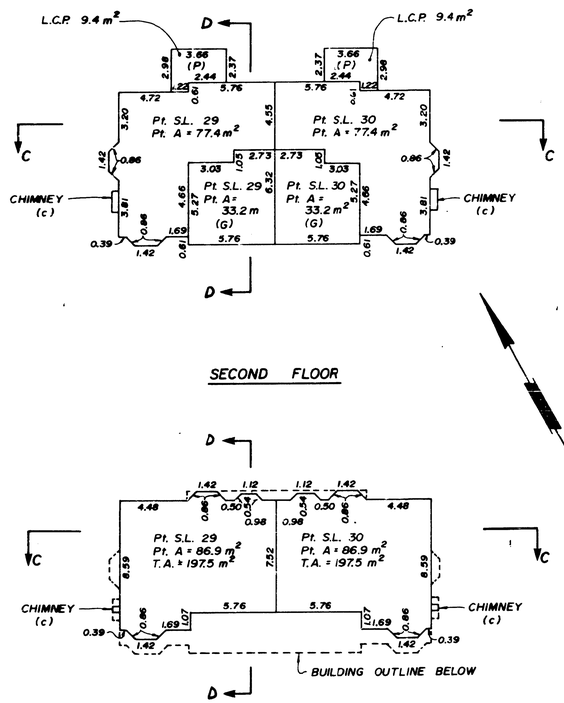

DATED THIS 20TH DAY OF JUNE, 1989.
M. J. McCluney B.C.L.S.

FILE 479 PHASE IV

BUILDING TWELVE FLOOR PLANS

SCALE 1:200

5 4 3 2 1 0 5 10

SHEET 8 OF 9 SHEETS
PHASE IV
STRATA PLAN N.W. 2690

MAIN FLOOR

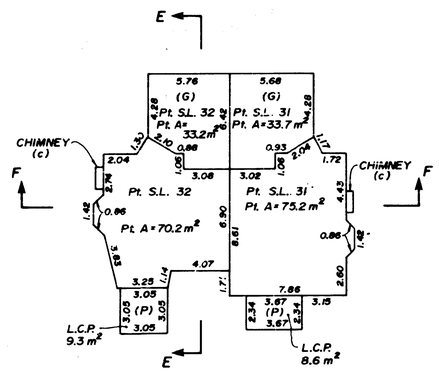

SECOND FLOOR

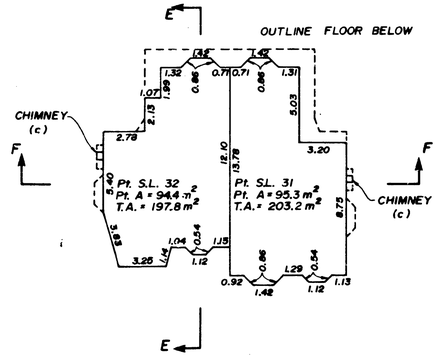

DATED THIS 20TH DAY OF JUNE, 1989.
M. J. McCluney B.C.L.S.

FILE 479 PHASE IV

BUILDING THIRTEEN FLOOR PLANS

SCALE 1:200

5 4 3 2 1 0 5 10

SHEET 9 OF 9 SHEETS
PHASE IV
STRATA PLAN N.W. 2690

MAIN FLOOR

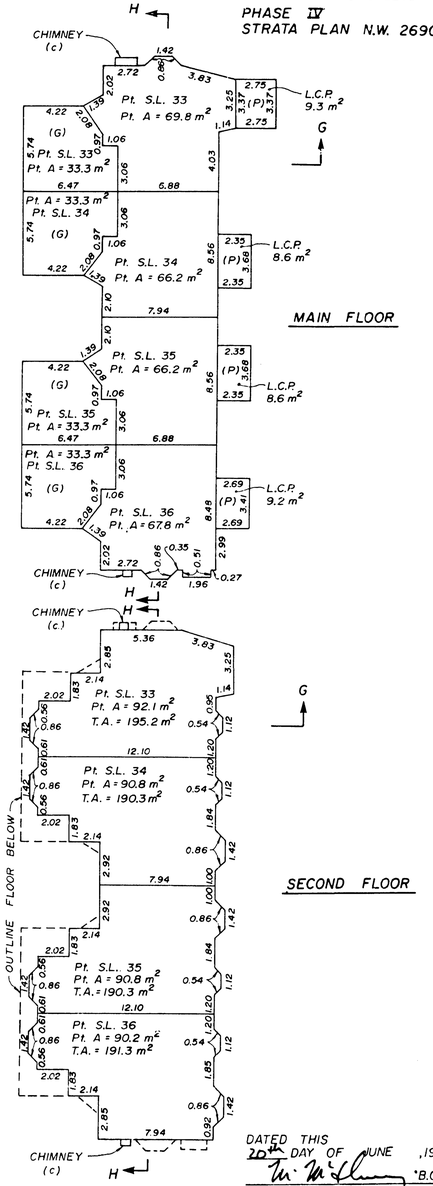

DATED THIS 20TH DAY OF JUNE, 1989
M. McCluney B.C.L.S.

FILE 479 PHASE IV